Part 2-E) Installation with Tsukayu bracket plates and fork clamps assembly kit

(iv) For bikes mounted with fork clamps; Honda Valkyrie; Yamaha Raider/ S; Suzuki M50, 1600 Marauder; Kawasaki VN900 Custom, 1500/ 1600 Meanstreak; Victory Hammer, Cross Roads, Broadwalk, etc

Two hardware kits are needed: a) bracket plates assembly kit; b) Fork clamps kit (different sizes provided for different bikes)

Fork clamps kit includes:
(Refer to Fig. 2-E-(iv)-1):
- (A1) Fork clamps x 4pcs
- (A2) MS spacers or RK-7.6mm x 2pcs
- (A3) MS spacers or RK-7.6/ 12.6mm x 2pcs
- (A4) Bolts (round head) x 4pcs
- (A6) M6 or M8 washers x 4pcs

Fig. 2-E-(iv)-1

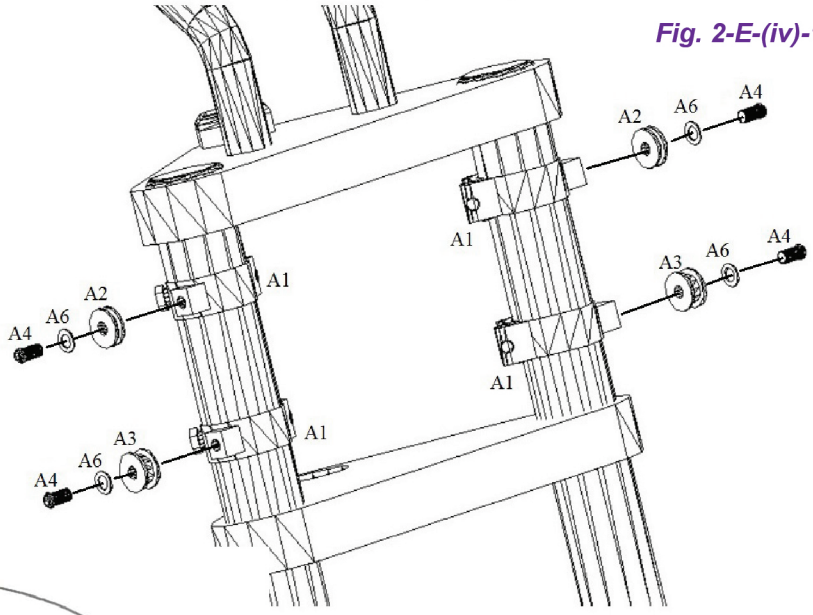

Fig. 2-E-(iv)-2

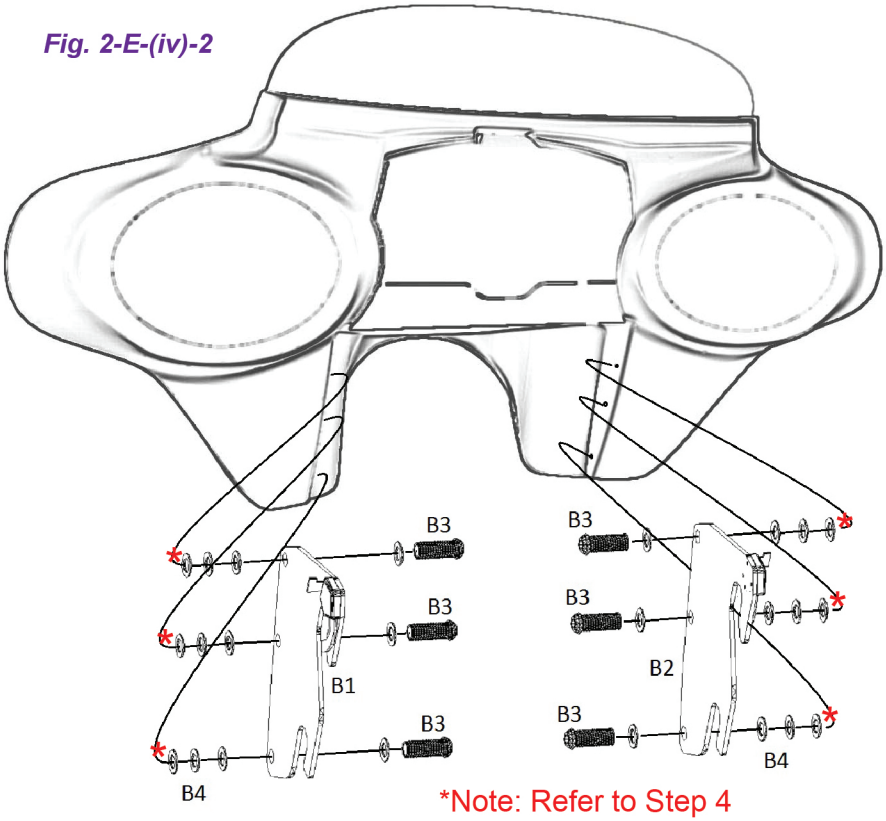

*Note: Refer to Step 4

3 holes designed Bracket plates kit includes:
(Refer to Fig. 2-E-(iv)-2)
Note: different shapes of bracket plates provided for different bikes
- (B1) Bracket plate left x 1pc
- (B2) Bracket plate right x 1pc
- (B3) Bolts (round head) x 6pcs
- (B4) additional M8 washers (use if necessary)

2 holes designed Bracket plates kit includes:
(Refer to Fig. 2-E-(iv)-3)
Note: different shapes of bracket plates provided for different bikes
- (B1) Bracket plate left x 1pc
- (B2) Bracket plate right x 1pc
- (B3) Bolts (round head) x 4pcs
- (B4) Spacers x 4pcs (for specific bike)
- (B5) M6 lock washers x 4pcs (for specific bike)
- (B6) additional M6 washers (use if necessary)

Fig. 2-E-(iv)-3

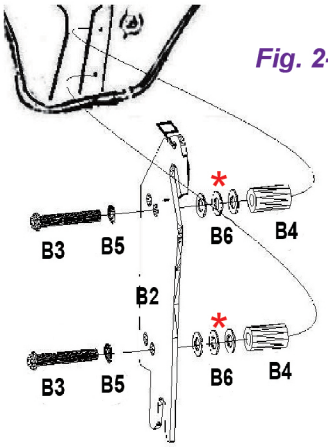

1. Cover gas tank and front fender with protective material.

2. Loosen the bolts on the fork clamps until you can slide them along the forks but tight enough to hold the fairing. Mount 2 fork clamps on each side of the forks with the quick release pins (A2 & A3) placed outside, but make sure they can be adjusted.Install the fork clamps as shown in Fig.2-E-(iv)-1.

3. Measure the distance between the slots on left and right quick release latches, this distance will be used to adjust the distance between the bracket plates on fairing, you need to measure it as accurate as possible, we suggest measuring in mm.

*4. Install the mounting plates assembly as shown in Fig.2-E-(iv)-2. Add provided washers if the distance of the two mounting plates doesn't perfectly match the distance between the two slots of left and right side quick release pins (A2 & A3). The spacers provided are close to what you need, but you may still need to add washers until they perfectly match, make sure you use same number of spacers and washers for all holes. Don't mix up Left and Right bracket plates, the latches come with the bracket plates. Try to put the fairing on, normally you will need to modify the number of washers several times until they match.

5. Now put the fairing on, you may need a helper for doing this step easier. Make sure the bracket plates are tightened securely. Latch the both side bracket plates securely. Tighten all the bolts on the fairing and all bolts on the whole mounting system.

Copyright © Tsukayu - All rights reserved